DRY MATERIAL FEEDING AND PREPARATION SYSTEMS

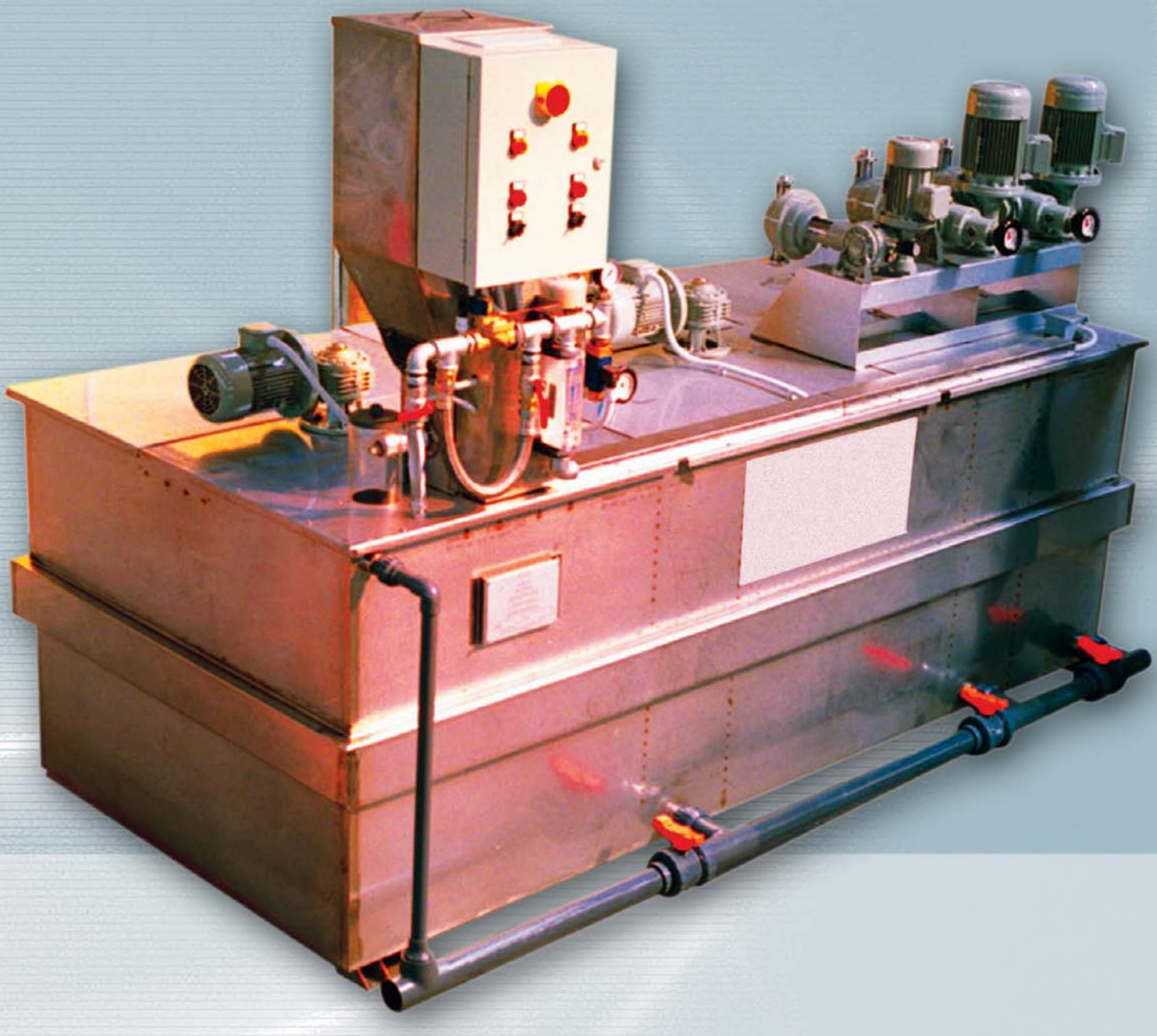

ISO 9001:2000 CERTIFIED COMPANY

seko

innovation > technology > future

POLYCENDOS

Automatic polyelectrolyte preparation systems

Construction Features

- Variable capacity powder dosing unit, hopper with powder level indicator, worm screw with bridge breaker scrapers
- Water inlet and regulation unit, solenoid valve, pressure switch, disperser nozzle
- Preparation tank with covers, divided into the three sectors of dissolving, maturing and storage
- Control and command electrical switchboard including the automatisms and indicators for fully automatic plant running
- Solution dosage system, generally consisting of dosing pumps selected from the numerous versions available from our range (ask for the specific catalogue)

- **Automatic functioning**
- **Separate regulation of water and powder**
- **Stainless steel construction**
- **Compact size**
- **Ready to be anchored to the floor if required**
- **No foundations necessary**

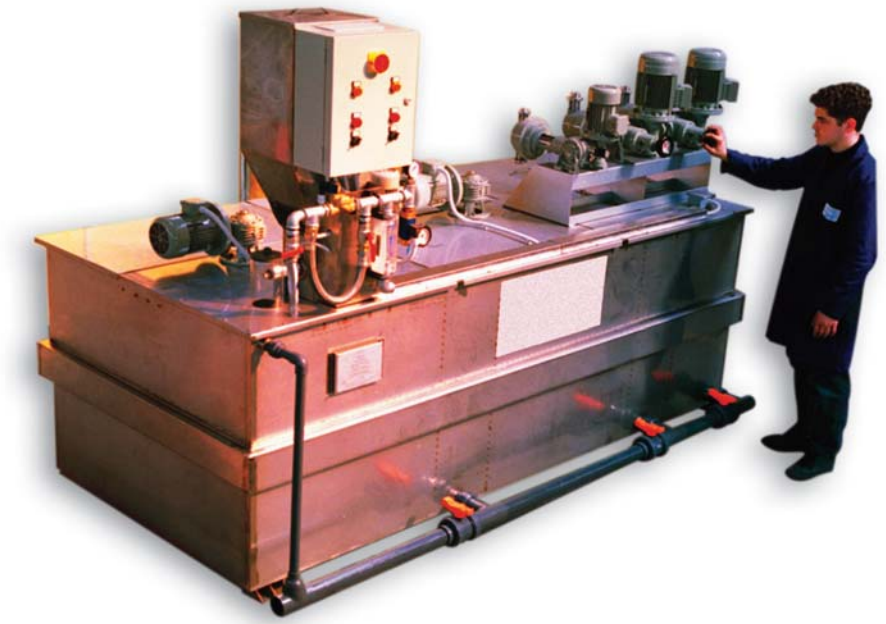

Function

The preparation tank is divided into three sectors: dissolving V1, maturing V2 and storage V3, interconnected by siphons that form a preferential path necessary for the formation of a top quality solution. The powder from the dosing unit comes into contact with the water, which, appropriately sprayed, from a nozzle, carries out the important action of dispersion.

The water/powder mixture then drops into the tank below where the dissolving phase begins. In dissolving sector V1 a slow agitator keeps the contents of the tank in movement, thus favoring homogenization of the solution.

The siphon transfers the solution to the maturing sector V2 where another slow agitator keeps it homogeneous until maturing is complete. Then the solution is transferred to storage sector V3 from which it can be transferred for use.

The level switches installed in this sector control plant automatic functions:

High and normal level switch: when the solution reaches the high level this switch stops the powder dosing unit and closes the water inlet solenoid valve. In the normal level position it enables dosing unit functioning and opens the water solenoid valve.

Low level switch: when the solution falls to minimum level this switch stops the dosing pump and lights up an alarm indicator on the electrical switchboard.

Options

- **Heating of dosing unit discharge pipe**
- **Overflow and drain header**
- **Water pressure reducer**
- **Third agitator in the storage section**
- **Automatic dosing pump adjustment**
- **Powder minimum level switch**
- **PLC programmable electrical switchboard**
- **Pneumatic powder loading**

PLS Systems for preparation of solutions from powder

PLSE Systems for preparation of solutions from emulsion

PLS COMBI Systems for preparation of solutions from powder and from emulsion

Mod.	Flow rate (l/h)	Powder dosing unit (l/h)		Hopper		Mixers		Dimensions (mm)			Weight
		min	max	l	kW	N.	kW	A	B	C	kg
PLS 550	550	0.6	2.9	70	0.22	2	0.18	1550	740	1880	260
PLS 1100	1100	1.2	5.9	70	0.37	2	0.18	1550	740	1880	260
PLS 2100	2100	1.6	7.8	70	0.22	2	0.18	2100	1030	1880	320
PLS 3000	3000	3.25	15.7	70	0.37	2	0.25	2610	1160	1880	450
PLS 4200	4200	3.25	15.7	70	0.37	2	0.37	2950	1380	1980	460
PLS 5000	5000	5.65	27.1	70	0.37	2	0.37	3210	1410	2040	500
PLS 8000	8000	5.65	27.1	70	0.37	2	0.37	3600	1570	2040	1600

Mod.	Flow rate (l/h)	Mixers		Dimensions (mm)			Weight
		N.	kW	A	B	C	kg
PLS E 550	550	2	0.18	1550	740	1880	210
PLS E 1100	1100	2	0.18	1550	740	1880	210
PLS E 2100	2100	2	0.18	2100	1030	1880	270
PLS E 3000	3000	2	0.25	2610	1160	1880	400
PLS E 4200	4200	2	0.37	2950	1380	1980	410
PLS E 5000	5000	2	0.37	3210	1410	2040	450
PLS E 8000	8000	2	0.37	3600	1570	2040	1550

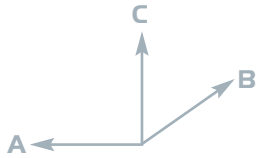

Mod.	Flow rate (l/h)	Hopper		Mixers		Dimensions (mm)			Weight
		l	kW	N.	kW	A	B	C	kg
PLS COMBI 550	550	70	0.22	2	0.18	1550	740	1880	290
PLS COMBI 1100	1100	70	0.37	2	0.18	1550	740	1880	290
PLS COMBI 2100	2100	70	0.22	2	0.18	2100	1030	1880	350
PLS COMBI 3000	3000	70	0.37	2	0.25	2610	1160	1880	480
PLS COMBI 4200	4200	70	0.37	2	0.37	2950	1380	1980	490
PLS COMBI 5000	5000	70	0.37	2	0.37	3210	1410	2040	530
PLS COMBI 8000	8000	70	0.37	2	0.37	3600	1570	2040	1630

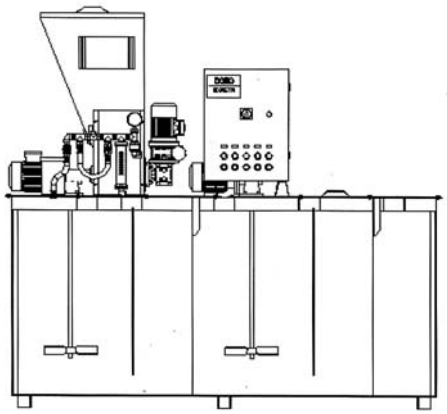

Mod.	Hopper with loader (mm)			Weight
	A	B	C	
PLS 550	1550	740	2610	290
PLS 1100	1550	740	2610	290
PLS 2100	2100	1030	2610	350
PLS 3000	2610	1160	2610	480
PLS 4200	2950	1380	2710	490
PLS 5000	3210	1410	2770	530
PLS 8000	3600	1570	2770	1630

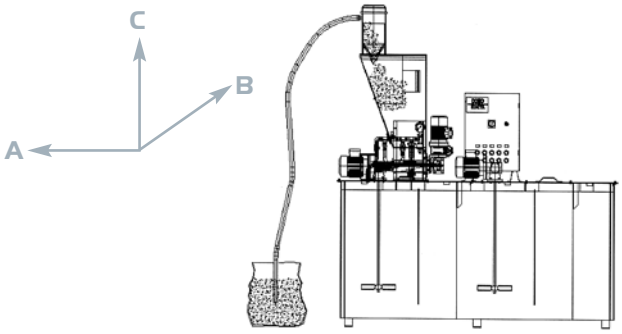

POLYMAN

Plant for manual preparation of polyelectrolyte

Polyelectrolyte solution is not very stable and its efficiency decreases with time. So the solution must be prepared only when necessary in order to use the whole quantity prepared and avoid waste.

The POLYMAN line has been designed to offer a complete system for manual preparation of polyelectrolyte solutions and is the ideal choice for occasional or discontinuous use.

POLYMAN systems are available in 1000 liters, and generally consist of:

1. Tanks in translucent high density polyethylene, UV stabilized, working temperatures -40 +60° C, built-in level gauge
2. Inspection cover with vent Ø 155 mm.
3. Disperser and water inlet in PVC
4. Powder loading filler in PVC
5. Slow agitator with shaft and rotor in AISI 316 stainless steel
6. Dosing pump (on request)

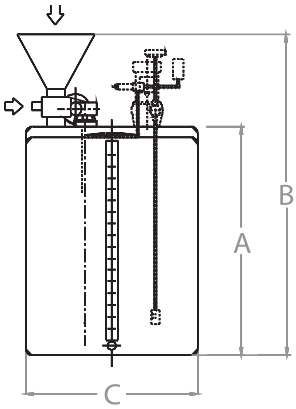

Mod.	Volume lt.	Mixers		Dimensions (mm)			Weight
		mod.	kW	A	B	C	kg
PLM2	230	MXR2	0.18	730	1260	640	32
PLM5	530	MXR5	0.18	875	1455	830	50
PLM10	1040	MXR10	0.37	1065	1805	1005	90

Fields of use

- Water clarification
- Biological treatment of urban and industrial waste water
- Filtering/decarbonation
- Sludge sedimentation and dehydration
- Scrubbing of blast furnace fumes
- Sulphuric acid production
- Neutralization of electroplating baths
- Oil industry
- Paper industry: treatment of cellulose water and recycled paper
- Sugar industry: treatment of sugar juices
- Extraction industries: marble quarries, flotation of minerals, treatment of mines, geothermic and oil wells drillings
- Tanning industry: water clarification and treatment

POWDER FEEDERS

Powder volumetric feeders are designed to provide a constant and accurate flow for any material grain, fibers and powders. Powder feeders are completely made in stainless steel SS304.

VG100

Construction Features

Hopper: It was two vertical walls to ensure even flow of the products; available in 50 and 100 liters versions; optional: supplementary mixer or vibration; internal polishing, level indicator.

Gearbox: motion transmission is carried out by a chin to pinion, which are connected to metering helix and to agitator rotates; optional: FPM seals-ring.

Speed variator: (manual regulation) it provides capacity control, when feeder is running between 10 and 100% of maximum delivery; 3-phase motor, 0,18 kw, insulation class F; optional: coaxial gear for constant feeding, gravitation indicator.

Metering helix: the accuracy depending from characteristics of products, from 0,5% to 3%; optional: reinforced metering helix, solid metering helix, extended helix and discharge tube.

OPTIONAL:

Thermostat resistance: to avoid product agglomeration, caused by wetness.

Dissolver: to ensure a perfect dilution of product in water, thanks to a specific design and to a water-flow control.

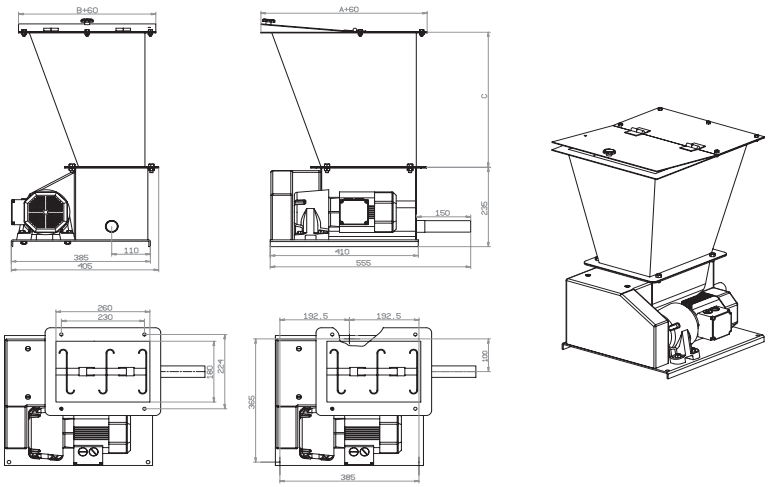

	03	04	05
Flow rate min. (l/h)	0,7	3	
Flow rate max. (l/h)	3,7	17	65
Continuous Flow rate (l/h)	2,8	13	50

VG50

Is a simple and economical product, with a compact design, able to assure at the same time a constant and accurate dosing; it can be used with powders, flakes and fibers that are not subject to agglomeration and so it does not need to use the agitator rotates (example: polyelectrolyte).

OPTIONAL:

Thermostat resistance: to avoid product agglomeration, caused by wetness.

Plexiglas discharge: to canalize the product without useless wastages.

Dissolver: to ensure a perfect dilution of product in water, thanks to a specific design and to a water-flow control.

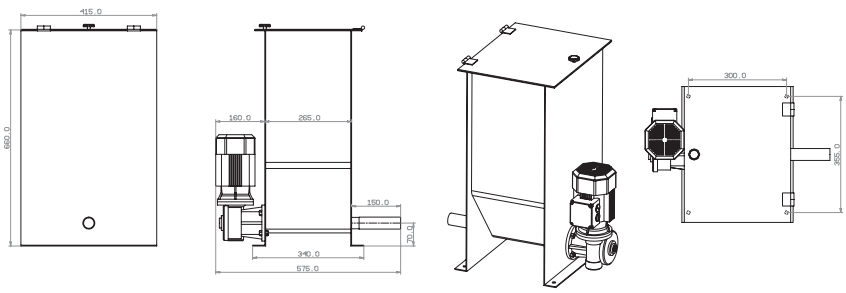

	03	04	05
Flow rate min. (l/h)	0,7	3	12
Flow rate max. (l/h)	3,7	17	65
Continuous Flow rate (l/h)	2,8	13	50

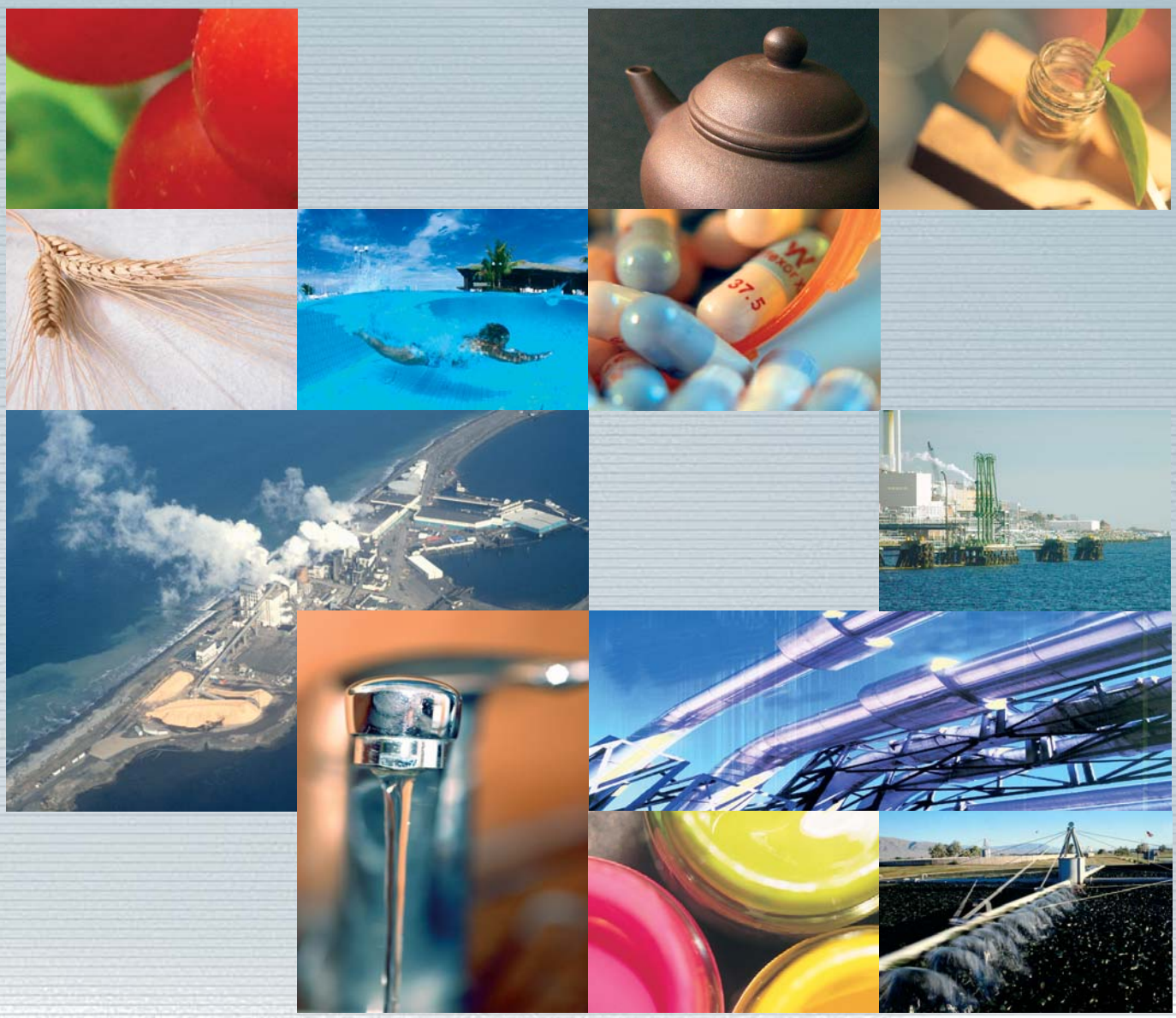

seko

www.seko.com

ISO 9001:2000 CERTIFIED COMPANY

SEKO do Brasil **BRAZIL** • SEKO China **CHINA** • SEKO France **FRANCE** • SEKO Deutschland **GERMANY** • SEKO Italia **ITALY** OOO SEKO **RUSSIA** • SEKO Asia Pacific **SINGAPORE** SEKO Southern Africa **SOUTH AFRICA** • SEKO Iberica **SPAIN** SEKO UK **UNITED KINGDOM** • SEKO Dosing Systems **USA**

The technical data may be modified without notice. The drawings and images are only indicative